PICDEM.net™ Internet/Ethernet Demonstration Board

Summary

The PICDEM.net™ demonstration board is an Internet/Ethernet demonstration board using the PIC18F452 microcontroller and TCP/IP firmware. The board supports any 40-pin DIP device that conforms to the standard pin-out used by the PIC16F877 or PIC18F452.

The board now uses the free Microchip TCP/IP Stack, which is available in Application Note AN833 (DS00833). Please refer to this document for code samples.

The Microchip TCP/IP Stack is a suite of programs that can either provide services to standard TCP/IP-based applications (HTTP Server, Mail Client, etc.) or be used in a custom TCP/IP-based application. Potential users do not need to know all of the intricacies of the TCP/IP specifications to use it, and those interested only in the accompanying HTTP Server application need not have specific knowledge of TCP/IP.

The TCP/IP stack is implemented in a modular fashion, with all of its services creating highly abstracted layers, each layer accessing services from one or more layers directly below it. The stack is written in the 'C' programming language, intended for both Microchip C18 and HI-TECH PICC 18 compilers, and is designed to run on Microchip's PIC18 family of microcontrollers only. Although, this particular implementation is specifically targeted to run on Microchip's PICDEM.net Internet/Ethernet demo board, it can be easily retargeted to any hardware equipped with a PIC18 microcontroller.

The PICDEM.net supports Ethernet and RS-232 interfaces. With a standard web browser such as Microsoft® Explorer, HTML web pages generated by the PICmicro® MCU can be viewed.

The initial board configuration is performed via the RS-232 port using a standard terminal program to configure the IP, Ethernet, etc., addresses for the board.

The demo board is also equipped with a 6-pin modular connector to interface directly with the MPLAB® ICD 2 In-Circuit Debugger. With MPLAB ICD 2, the developer can now modify or reprogram the onboard Flash-based PICmicro device to meet the specific needs. A generous breadboarding area is also available to add special circuits for experimentation. The area is large enough to add an embedded modem to provide for dial-up capability.

Several status indicators and user interface devices are provided, including a 16 x 2 LCD indicator and LEDs.

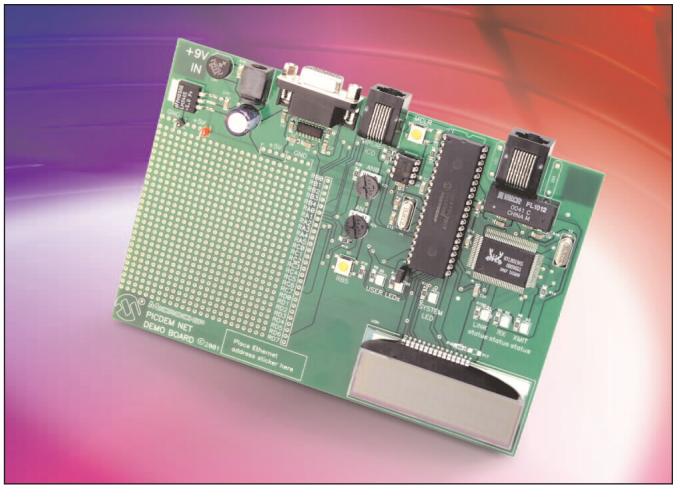

Features

- Free Microchip TCP/IP stack
- Web server with HTML
- 24L256 Serial EEPROM
- Firmware for Xmodem to download web pages into Serial EEPROM
- ICSP™/ICD interface connector
- Ethernet interface
- RS-232 interface
- 16 x 2 LCD display

Package Contents

- Demo Board
- PIC18F452 MCU
- TCP/IP stack by Microchip
- MPLAB IDE Software
- Demo and Evaluation Kit Software and Documentation
- CAT-5 Ethernet Crossover Cable
- DB9 Serial Cable
- Universal Power Supply

Host System Requirements

- PC-compatible system with a Intel Pentium® class or higher processor, or equivalent
- A minimum of 32 MB RAM
- A minimum of 40 MB available hard drive space
- CD-ROM drive (for use with the accompanying CD)
- Available serial port
- Microsoft Windows® 95/98, Windows NT®, Windows 2000 or Windows XP

MICROCHIP
Development Systems

System Description

The PICDEM.net board is used to experiment with Microchip's various TCP/IP solutions. The user has immediate network access after the initial set up of the IP address. The Flash microcontroller allows modifications to the demonstration program to add application software. The breadboard area includes a regulated 5V power supply for the addition of sensors or custom circuits for testing. Other standard or custom stack control software can be loaded for evaluation.

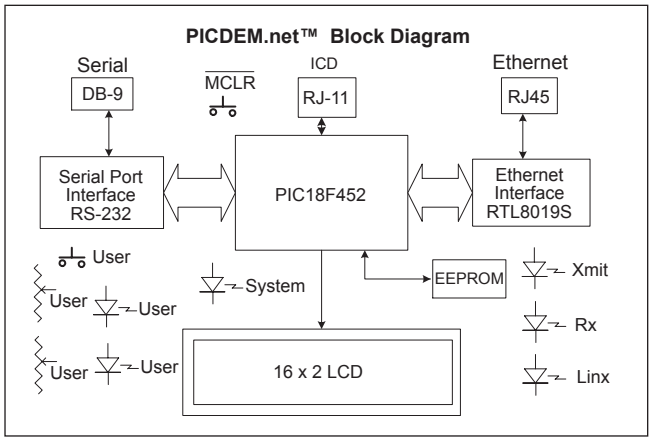

Part Numbers and Ordering Information:

PICDEM.net™ Internet/Ethernet Demonstration Board		
Part Number	**Description**	**Availability**
DM163004-LT	PICDEM.net™ Demonstration Board	Now

Development Tools from Microchip	
MPLAB® IDE	Integrated Development Environment (IDE)
MPASM™ Assembler	Universal PICmicro® Macro-Assembler
MPLINK™ Linker/MPLIB™ Librarian	Linker/Librarian
MPLAB SIM Simulator	Software Simulator
MPLAB C18	C Compiler for PIC18CXXX MCUs
MPLAB C30	C Compiler for dsPIC30F MCUs
PICkit™ 1	Flash Starter Kit
MPLAB ICD 2	In-Circuit Debugger
MPLAB ICE 2000	Full-featured Modular In-Circuit Emulator for PIC12, PIC16 and PIC18 MCUs
MPLAB ICE 4000	Full-featured Modular In-Circuit Emulator for PIC18 and dsPIC MCUs
PICSTART® Plus Programmer	Entry-level Development Kit with Programmer
MPLAB PM3 Device Programmer	Full-featured, Modular Device Programmer
KEELOQ® Evaluation Kit	Encoder/Decoder Evaluator
microID® Developer's Kit	125 kHz and 13.56 MHz RFID Development Tools

Americas

Atlanta	(770) 640-0034
Boston	(978) 692-3848
Chicago	(630) 285-0071
Dallas	(972) 818-7423
Detroit	(248) 538-2250
Kokomo	(765) 864-8360
Los Angeles	(949) 462-9523
Phoenix	(480) 792-7200
San Jose	(650) 215-1444
Toronto	(905) 673-0699

Asia/Pacific

Australia - Sydney	61-2-9868-6733
China - Beijing	86-10-8528-2100
China - Chengdu	86-28-8676-6200
China - Fuzhou	86-591-8750-3506
China - Hong Kong SAR	852-2401-1200
China - Qingdao	86-532-502-7355
China - Shanghai	86-21-5407-5533
China - Shenyang	86-24-2334-2829
China - Shenzhen	86-755-8203-2660
China - Shunde	86-757-2839-5507
India - Bangalore	91-80-2229-0061
Japan - Kanagawa	81-45-471-6166
Korea - Seoul	82-2-554-7200
Singapore	65-6334-8870
Taiwan - Taipei	886-2-2500-6610
Taiwan - Kaohsiung	886-7-536-4818
Taiwan - Hsinchu	886-3-572-9526

Europe

Austria - Weis	43-7242-2244-399
Denmark - Ballerup	45-4420-9895
France - Massy	33-1-69-53-63-20
Germany - Ismaning	49-89-627-144-0
Italy - Milan	39-0331-742611
Netherlands - Drunen	31-416-690399
England - Berkshire	44-118-921-5869

As of 10/19/04

Microchip Technology Inc. • 2355 W. Chandler Blvd. • Chandler, AZ 85224-6199 USA • (480) 792-7200 • FAX (480) 792-7277

The Microchip name and logo, the Microchip logo, Accuron, dsPIC, KEELOQ, microID, MPLAB, PIC, PICmicro, PICSTART, PRO MATE, PowerSmart, rfPIC, and SmartShunt are registered trademarks of Microchip Technology Incorporated in the U.S.A. and other countries. AmpLab, FilterLab, MXDEV, MXLAB, PICMASTER, SEEVAL, SmartSensor and The Embedded Control Solutions Company are registered trademarks of Microchip Technology Incorporated in the U.S.A. Analog-for-the-Digital Age, Application Maestro, dsPICDEM, dsPICDEM.net, dsPICworks, ECAN, ECONOMONITOR, FanSense, FlexROM, fuzzyLAB, In-Circuit Serial Programming, ICSP, ICEPIC, Migratable Memory, MPASM, MPLIB, MPLINK, MPSIM, PICkit, PICDEM, PICDEM.net, PICLAB, PICtail, PowerCal, PowerInfo, PowerMate, PowerTool, rfLAB, rfPICDEM, Select Mode, Smart Serial, SmartTel and Total Endurance are trademarks of Microchip Technology Incorporated in the U.S.A. and other countries. SQTP is a service mark of Microchip Technology Incorporated in the U.S.A. All other trademarks mentioned herein are property of their respective companies.
© 2004, Microchip Technology Incorporated, Printed in the U.S.A., All Rights Reserved. 10/04

DS51240B